(for DA-Type only) SELV IP67 IS 15885(Part 2/Sec13) R-41027766 (for PWM-120-12,24 only) Type HL

Features

- Constant voltage PWM style output with frequency 1.47kHz
- Plastic housing with class II design
- Built-in active PFC function
- No load power consumption <0.5w / standby power consumption <0.5W(DA-type)
- Fully encapsulated with IP67 level
- Function options: 3 in 1 dimming (dim-to-off); DALI
- Typical lifetime>50000 hours
- 5 years warranty

Applications

- LED strip lighting
- Indoor LED lighting
- LED decorative lighting
- LED architecture lighting
- Type "HL" for use in class I, division 2 hazardous (classified) location.

Description

PWM-120 series is a 120W AC/DC LED driver featuring the constant voltage mode with PWM style output, which is able to maintain the color temperature and the brightness homogeneity when driving all kinds of LED strips. PWM-120 operates from 90～305VAC and offers models with different rated voltage ranging between 12V and 48V. Thanks to the high efficiency up to 90.5%, with the fanless design, the entire series is able to operate for -40℃ ~ +90℃ case temperature under free air convection. The entire series is rated with IP67 ingress protection level and is suitable to work for dry, damp or wet locations. PWM-120 is equipped with dimming function that varies the duty cycle of the output, providing great flexibility for LED strips applications.

Model Encoding

PWM - 120 - 36 □

- Function options
- Rated output voltage(12/24/36/48V)
- Rated wattage
- Series name

Type	IP Level	Function	Note
Blank	IP67	3 in 1 dimming function (0~10Vdc, 10V PWM signal and resistance)	In stock
DA	IP67	DALI control technology.(for 12V/24V DA type only)	In stock

MEANWELLCHINHANG.COM

SPECIFICATION

MODEL		PWM-120-12 □	PWM-120-24 □	PWM-120-36 □	PWM-120-48 □
OUTPUT	DC VOLTAGE	12V	24V	36V	48V
	RATED CURRENT	10A	5A	3.4A	2.5A
	RATED POWER	120W	120W	122.4W	120W
	DIMMING RANGE	0 ~ 100%			
	PWM FREQUENCY (Typ.)	1.47kHz			
	SETUP, RISE TIME Note.2	500ms, 80ms/ 230VAC or 115VAC			
	HOLD UP TIME (Typ.)	16ms/230VAC or 115VAC			
INPUT	VOLTAGE RANGE Note.3	90 ~ 305VAC 127 ~ 431VDC (Please refer to "STATIC CHARACTERISTIC" section)			
	FREQUENCY RANGE	47 ~ 63Hz			
	POWER FACTOR (Typ.)	PF>0.97/115VAC, PF>0.96/230VAC, PF>0.94/277VAC @ full load (Please refer to "POWER FACTOR (PF) CHARACTERISTIC" section)			
	TOTAL HARMONIC DISTORTION	THD< 20%(@load≧60%/115VAC, 230VAC; @load≧75%/277VAC) (Please refer to "TOTAL HARMONIC DISTORTION" section)			
	EFFICIENCY (Typ.)	88%	90%	90%	90.5%
	AC CURRENT (Typ.)	1.3A / 115VAC 0.65A / 230VAC 0.55A / 277VAC			
	INRUSH CURRENT (Typ.)	COLD START 60A(twidth=520μs measured at 50% Ipeak) at 230VAC; Per NEMA 410			
	MAX. NO. of PSUs on 16A CIRCUIT BREAKER	4 units (circuit breaker of type B) / 6 units (circuit breaker of type C) at 230VAC			
	LEAKAGE CURRENT	<0.25mA / 277VAC			
	NO LOAD/STANDBY POWER CONSUMPTION	No load power consumption<0.5w for blank-type;standby power consumption<0.5W for DA-type			
PROTECTION	OVERLOAD	108 ~ 120% rated output power Hiccup mode, recovers automatically after fault condition is removed			
	SHORT CIRCUIT	Shut down o/p voltage, re-power on to recover			
	OVER VOLTAGE	15 ~ 17V	28 ~ 34V	41 ~ 46V	54 ~ 60V
		Shut down o/p voltage, re-power on to recover			
	OVER TEMPERATURE	Shut down o/p voltage, re-power on to recover			
ENVIRONMENT	WORKING TEMP.	Tcase=-40 ~ +90℃ (Please refer to " OUTPUT LOAD vs TEMPERATURE" section)			
	MAX. CASE TEMP.	Tcase=+90℃			
	WORKING HUMIDITY	20 ~ 95% RH non-condensing			
	STORAGE TEMP., HUMIDITY	-40 ~ +80℃, 10 ~ 95% RH			
	TEMP. COEFFICIENT	±0.03%/℃ (0 ~ 45℃,except 0 ~ 40℃ for 12V)			
	VIBRATION	10 ~ 500Hz, 5G 12min./1cycle, period for 72min. each along X, Y, Z axes			
SAFETY & EMC	SAFETY STANDARDS Note.5	UL8750(type "HL"), CSA C22.2 No. 250.13-12; ENEC EN61347-1, EN61347-2-13,EN62384 independent, IP67,BIS IS15885(for PWM-120-12,24 only), EAC TP TC 004 approved; Design refer to EN60335-1			
	DALI STANDARDS	Comply with IEC62386-101, 102, 207 for DA-Type only			
	WITHSTAND VOLTAGE	I/P-O/P:3.75KVAC			
	ISOLATION RESISTANCE	I/P-O/P:100M Ohms / 500VDC / 25℃/ 70% RH			
	EMC EMISSION Note.6	Compliance to EN55015, EN61000-3-2 Class C (@load≧60%) ; EN61000-3-3,EAC TP TC 020			
	EMC IMMUNITY	Compliance to EN61000-4-2,3,4,5,6,8,11; EN61547, light industry level (surge immunity Line-Line 2KV),EAC TP TC 020			
OTHERS	MTBF	860.4K hrs min. Telcordia SR-332 (Bellcore) ; 228.7K hrs min. MIL-HDBK-217F (25℃)			
	DIMENSION	191*63*37.5mm (L*W*H)			
	PACKING	0.97Kg; 15pcs/15.6Kg/0.87CUFT			

NOTE

1. All parameters NOT specially mentioned are measured at 230VAC input, rated current and 25℃ of ambient temperature.
2. De-rating may be needed under low input voltages. Please refer to "STATIC CHARACTERISTIC" sections for details.
3. Length of set up time is measured at first cold start. Turning ON/OFF the driver may lead to increase of the set up time.
4. The driver is considered as a component that will be operated in combination with final equipment. Since EMC performance will be affected by the complete installation, the final equipment manufacturers must re-qualify EMC Directive on the complete installation again.
5. The model certified for CCC(GB19510.14, GB19510.1, GB17743 and GB17625.1) is an optional model . Please contact MEAN WELL for details.
6. This series meets the typical life expectancy of >50,000 hours of operation when Tcase, particularly (tc) point (or TMP, per DLC), is about 75℃ or less.
7. Please refer to the warranty statement on MEAN WELL's website at http://www.meanwell.com

MEANWELLCHINHHANG.COM

■ DIMMING OPERATION

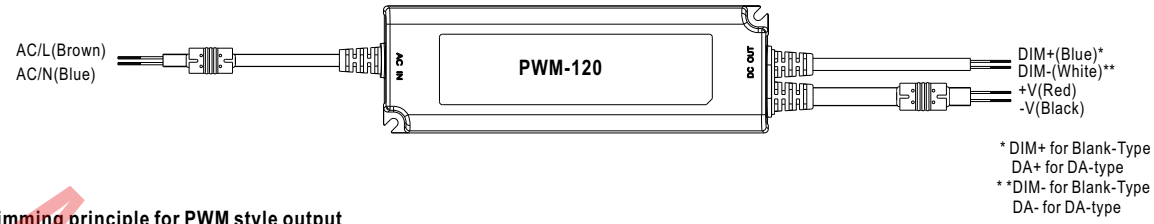

※ Dimming principle for PWM style output

- Dimming is achieved by varying the duty cycle of the output current.

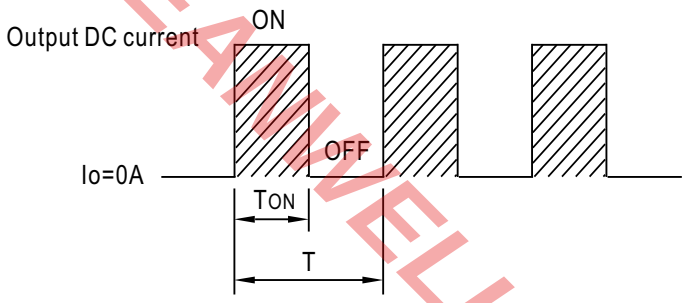

$$\text{Duty cycle}(\%) = \frac{T_{ON}}{T} \times 100\%$$

Output PWM frequency : 1.47KHz fixed (Typ.)

※ 3 in 1 dimming function (for Blank-Type)

- Apply one of the three methodologies between DIM+ and DIM-: 0 ~ 10VDC, or 10V PWM signal or resistance.
- Dimming source current from power supply: 100μA (typ.)

◎ Applying additive 0 ~ 10VDC

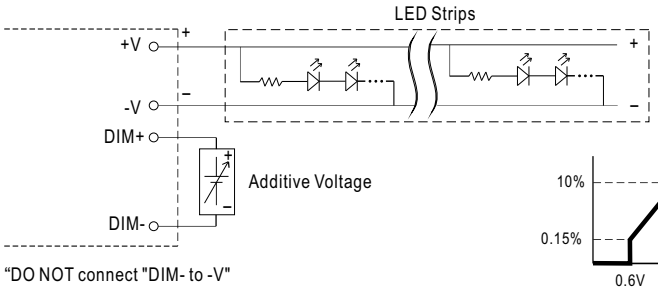

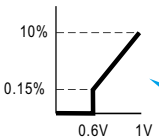

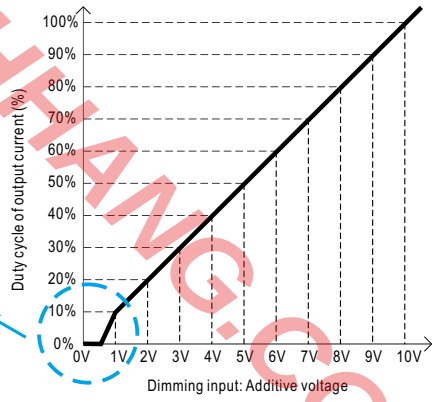

◎ Applying additive 10V PWM signal (frequency range 100Hz ~ 3KHz):

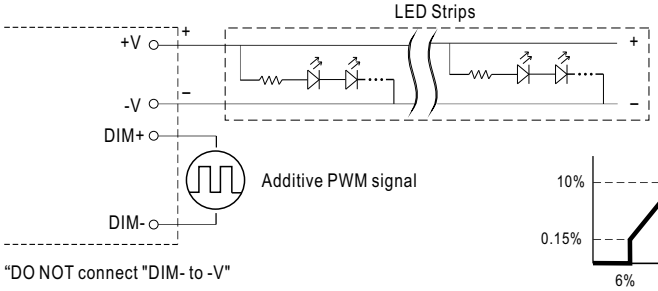

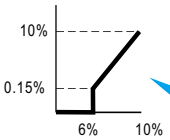

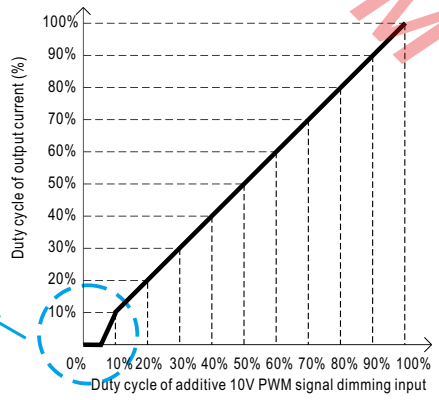

MEANWELLCHINHHANG.COM

◎ Applying additive resistance:

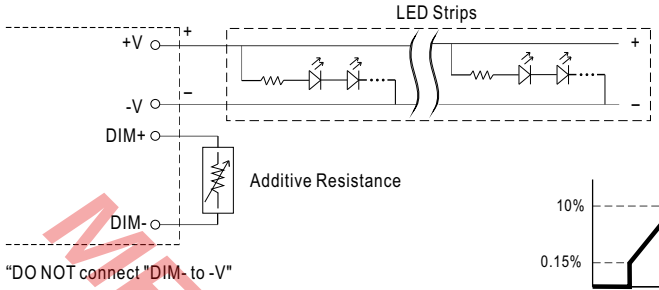

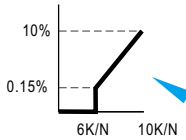

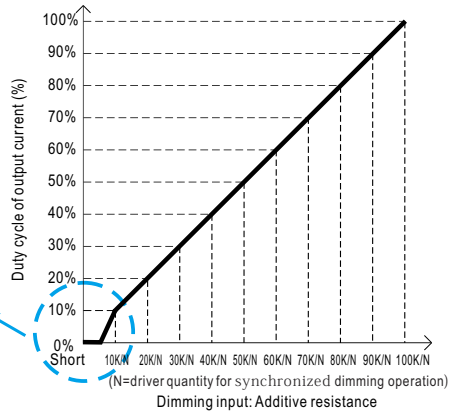

Note : 1. Min. duty cycle of output current is about 0.15%, and the dimming input is about 6KΩ or 0.6VDC, or 10V PWM signal with 6% duty cycle.
2. The duty cycle of output current could drop down to 0% when dimming input is less than 6KΩ or less than 0.6VDC, or 10V PWM signal with duty cycle less than 6%.

※ DALI Interface (primary side; for DA-Type)

- Apply DALI signal between DA+ and DA-.
- DALI protocol comprises 16 groups and 64 addresses.
- First step is fixed at 6% of output

MEANWELLCHINHHANG.COM

■ OUTPUT LOAD vs TEMPERATURE

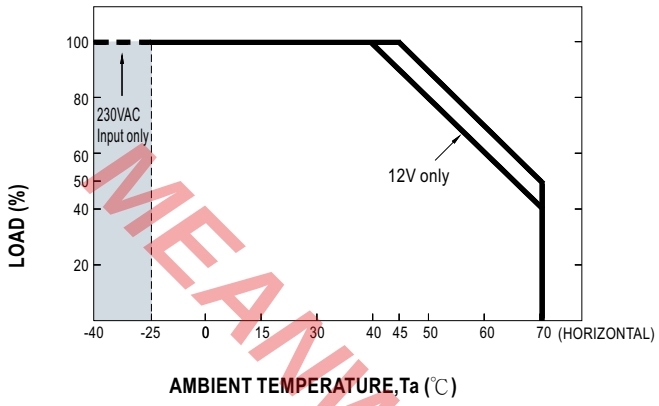

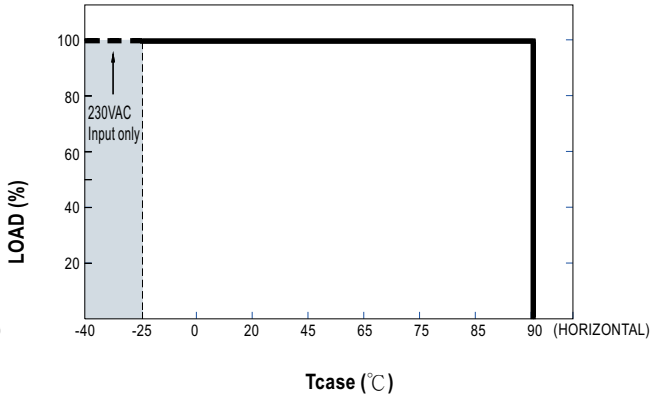

■ STATIC CHARACTERISTIC

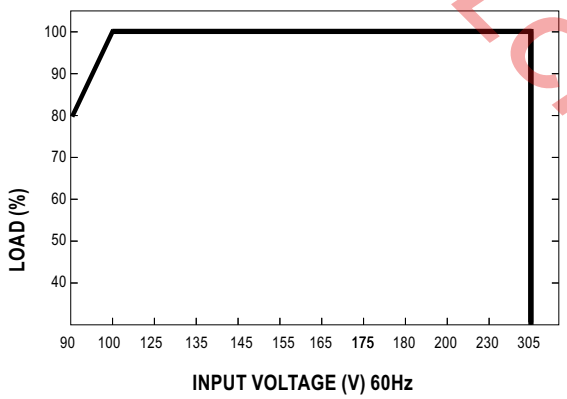

※De-rating is needed under low input voltage.

■ POWER FACTOR (PF) CHARACTERISTIC

※ Tcase at 80℃

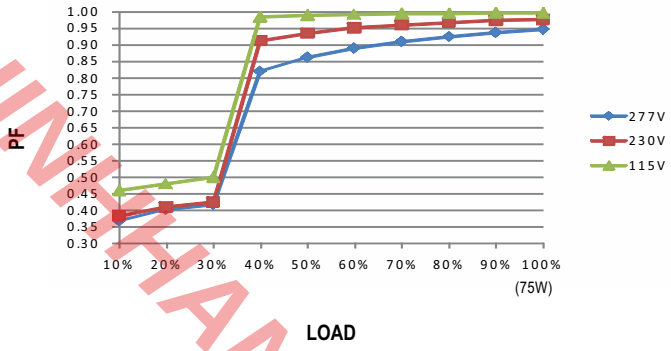

■ TOTAL HARMONIC DISTORTION (THD)

※ 48V Model, Tcase at 80℃

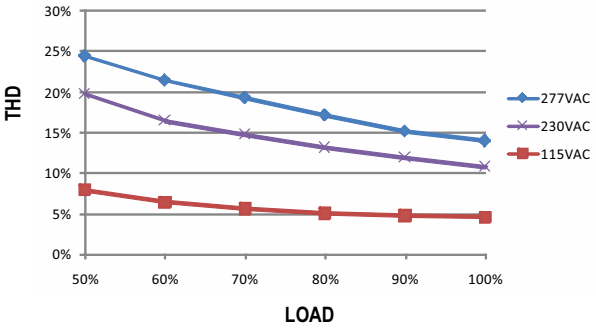

■ EFFICIENCY vs LOAD

PWM-120 series possess superior working efficiency that up to 90.5% can be reached in field applications.

※ 48V Model, Tcase at 80℃

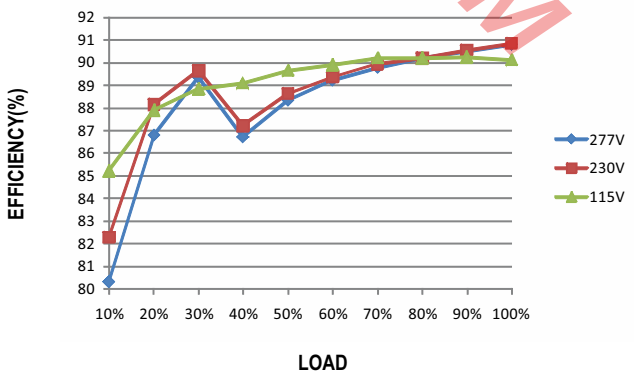

MEANWELLCHINHANG.COM

■ LIFE TIME

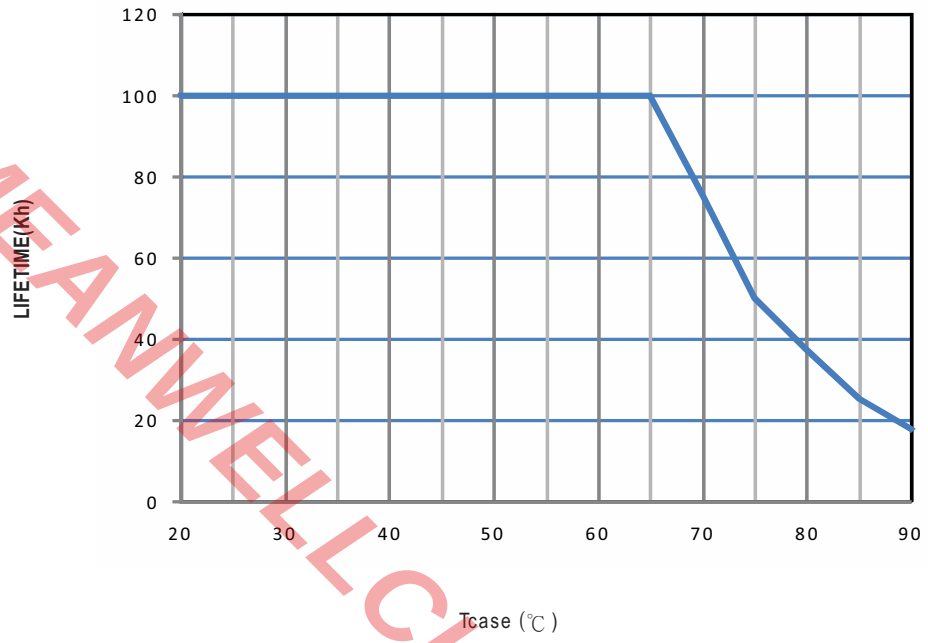

MEANWELLCHINHHANG.COM

■ Block Diagram

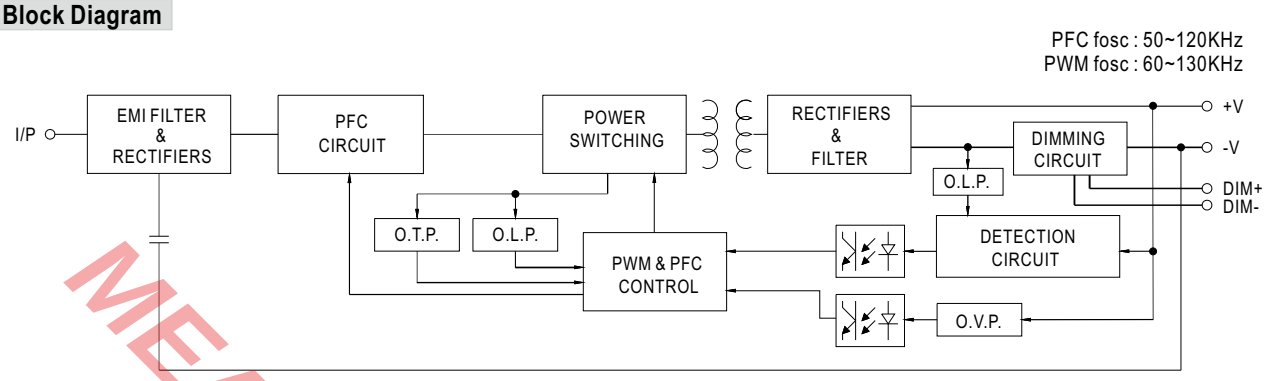

■ Mechanical Specification

Case No. PWM-120 Unit:mm

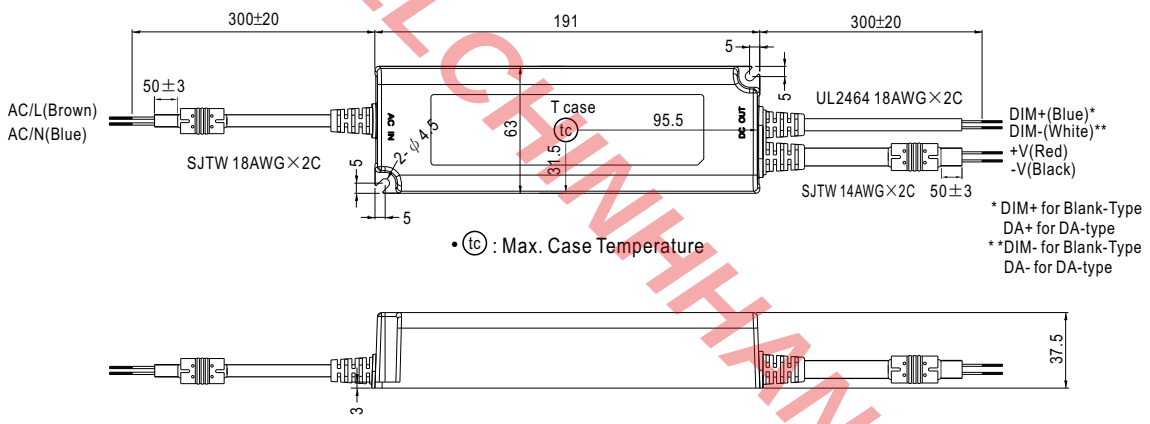

MEANWELLCHINHHANG.COM

■ Installation Manual

◎Connection for Blank-type

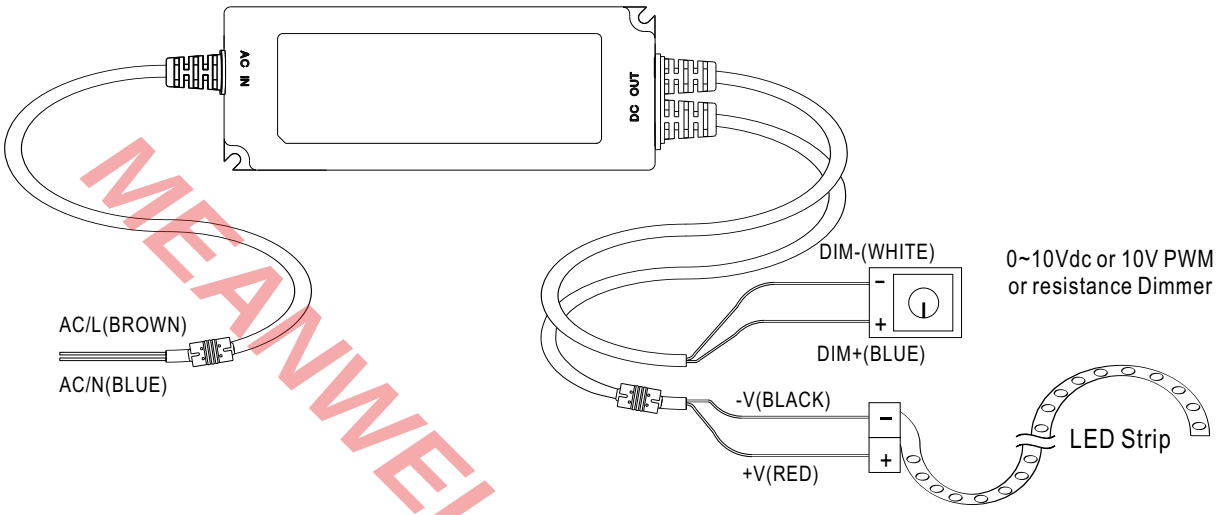

◎Cautions

- Before commencing any installation or maintenance work, please disconnect the power supply from the utility. Ensure that it cannot be re-connected inadvertently!
- Keep proper ventilation around the unit and do not stack any object on it. Also a 10-15 cm clearance must be kept when the adjacent device is a heat source.
- Mounting orientations other than standard orientation or operate under high ambient temperature may increase the internal component temperature and will require a de-rating in output current.
- Current rating of an approved primary /secondary cable should be greater than or equal to that of the unit. Please refer to its specification.
- For LED drivers with waterproof connectors, verify that the linkage between the unit and the lighting fixture is tight so that water cannot intrude into the system.
- For dimmable LED drivers, make sure that your dimming controller is capable of driving these units.PWM series require 0.15mA each unit.
- Tc max. is identified on the product label. Please make sure that temperature of Tc point will not exceed limit.
- DO NOT connect "DIM- to -V".
- Suitable for indoor use or outdoor use without direct sunlight exposure. Please avoid immerse in the water over 30 minutes.
- The power supply is considered as a component that will be operated in combination with final equipment. Since EMC performance will be affected by the complete installation, the final equipment manufacturers must re-qualify EMC Directive on the complete installation again.
- For more information about installation, Please refer to : http://www.meanwell.com/manual.html for details.

MEANWELLCHINHHANG.COM