350W Single Output Switching Power Supply

LRS-350 series

R33100
RoHS

Features

- AC input range selectable by switch
- Withstand 300VAC surge input for 5 second
- Protections: Short circuit / Overload / Over voltage / Over temperature
- Forced air cooling by built-in DC fan
- Built-in cooling Fan ON-OFF control
- 1U low profile
- Withstand 5G vibration test
- LED indicator for power on
- No load power consumption<0.75W
- 100% full load burn-in test
- High operating temperature up to 70℃
- Operating altitude up to 5000 meters (Note.8)
- High efficiency, long life and high reliability
- 3 years warranty

Applications

- Industrial automation machinery
- Industrial control system
- Mechanical and electrical equipment
- Electronic instruments, equipments or apparatus

Description

LRS-350 series is a 350W single-output enclosed type power supply with 30mm of low profile design. Adopting the input of 115VAC or 230VAC (select by switch), the entire series provides an output voltage line of 3.3V, 4.2V, 5V, 12V, 15V, 24V, 36V and 48V.

In addition to the high efficiency up to 89%, with the built-in long life fan LRS-350 can work under -25~+70℃ with full load. Delivering an extremely low no load power consumption (less than 0.75W), it allows the end system to easily meet the worldwide energy requirement. LRS-350 has the complete protection functions and 5G anti-vibration capability; it is complied with the international safety regulations such as UL60950-1. LRS-350 series serves as a high price-to-performance power supply solution for various industrial applications.

Model Encoding

LRS - 350 - 3.3

- 3.3 — Output voltage
- 350 — Output power
- LRS — Series name

MEANWELL.CHINHHANG.COM

MEAN WELL

350W Single Output Switching Power Supply

LRS-350 series

SPECIFICATION

MODEL		LRS-350-3.3	LRS-350-4.2	LRS-350-5	LRS-350-12	LRS-350-15	LRS-350-24	LRS-350-36	LRS-350-48
OUTPUT	DC VOLTAGE	3.3V	4.2V	5V	12V	15V	24V	36V	48V
	RATED CURRENT	60A	60A	60A	29A	23.2A	14.6A	9.7A	7.3A
	CURRENT RANGE	0 ~ 60A	0 ~ 60A	0 ~ 60A	0 ~ 29A	0 ~ 23.2A	0 ~ 14.6A	0 ~ 9.7A	0 ~ 7.3A
	RATED POWER	198W	252W	300W	348W	348W	350.4W	349.2W	350.4W
	RIPPLE & NOISE (max.) Note.2	150mVp-p	150mVp-p	150mVp-p	150mVp-p	150mVp-p	150mVp-p	200mVp-p	200mVp-p
	VOLTAGE ADJ. RANGE	2.97 ~ 3.6V	3.6 ~ 4.4V	4.5 ~ 5.5V	10.2 ~ 13.8V	13.5 ~ 18V	21.6 ~ 28.8V	32.4 ~ 39.6V	43.2 ~ 52.8V
	VOLTAGE TOLERANCE Note.3	±4.0%	±4.0%	±3.0%	±1.5%	±1.0%	±1.0%	±1.0%	±1.0%
	LINE REGULATION Note.4	±0.5%	±0.5%	±0.5%	±0.5%	±0.5%	±0.5%	±0.5%	±0.5%
	LOAD REGULATION Note.5	±2.5%	±2.5%	±2.0%	±1.0%	±0.5%	±0.5%	±0.5%	±0.5%
	SETUP, RISE TIME	1300ms, 50ms/230VAC 1300ms,50ms/115VAC at full load							
	HOLD UP TIME (Typ.)	16ms/230VAC 12ms/115VAC at full load							
INPUT	VOLTAGE RANGE	90 ~ 132VAC / 180 ~ 264VAC by switch 240 ~ 370VDC (switch on 230VAC)							
	FREQUENCY RANGE	47 ~ 63Hz							
	EFFICIENCY (Typ.)	79.5%	81.5%	83.5%	85%	86%	88%	88.5%	89%
	AC CURRENT (Typ.)	6.8A/115VAC 3.4A/230VAC							
	INRUSH CURRENT (Typ.)	60A/115VAC 60A/230VAC							
	LEAKAGE CURRENT	<2mA / 240VAC							
PROTECTION	OVER LOAD	110 ~ 140% rated output power							
		Protection type : Hiccup mode, recovers automatically after fault condition is removed							
	OVER VOLTAGE	3.8 ~ 4.45V	4.6 ~ 5.4V	5.75 ~ 6.75V	13.8 ~ 16.2V	18 ~ 21V	28.8 ~ 33.6V	41.4 ~ 46.8V	55.2 ~ 64.8V
		Protection type : Hiccup mode, recovers automatically after fault condition is removed							
	OVER TEMPERATURE	Hiccup mode, recovers automatically after fault condition is removed							
FUNCTION	FAN ON/OFF CONTROL (Typ.)	RTH3≧50℃ FAN ON, ≦40℃ FAN OFF							
ENVIRONMENT	WORKING TEMP.	-25 ~ +70℃ (Refer to "Derating Curve")							
	WORKING HUMIDITY	20 ~ 90% RH non-condensing							
	STORAGE TEMP., HUMIDITY	-40 ~ +85℃, 10 ~ 95% RH							
	TEMP. COEFFICIENT	±0.03%/℃ (0 ~ 50℃)							
	VIBRATION	10 ~ 500Hz, 5G 10min./1cycle, 60min. each along X, Y, Z axes							
SAFETY	SAFETY STANDARDS	UL60950-1, BSMI CNS14336-1, EAC TP TC 004 approved							
	WITHSTAND VOLTAGE	I/P-O/P:3KVAC I/P-FG:2KVAC O/P-FG:0.5KVAC							
	ISOLATION RESISTANCE	I/P-O/P, I/P-FG, O/P-FG:100M Ohms/500VDC / 25℃/ 70% RH							
	EMC EMISSION	Compliance to BSMI CNS13438, EAC TP TC 020							
	EMC IMMUNITY	Compliance to EAC TP TC 020							
OTHERS	MTBF	327.9K hrs min. MIL-HDBK-217F (25℃)							
	DIMENSION	215*115*30mm (L*W*H)							
	PACKING	0.76Kg; 15pcs/12.4Kg/0.78CUFT							

NOTE

1. All parameters NOT specially mentioned are measured at 230VAC input, rated load and 25℃ of ambient temperature.
2. Ripple & noise are measured at 20MHz of bandwidth by using a 12" twisted pair-wire terminated with a 0.1uf & 47uf parallel capacitor.
3. Tolerance : includes set up tolerance, line regulation and load regulation.
4. Line regulation is measured from low line to high line at rated load.
5. Load regulation is measured from 0% to 100% rated load.
6. Length of set up time is measured at cold first start. Turning ON/OFF the power supply very quickly may lead to increase of the set up time.
7. The 150% peak load capability is built in for up to 1 second for 12~48V.LRS-350 will enter hiccup mode if the peak load is delivered for over 1 second and will recover once it resumes to the rated current level(115VAC/230VAC).
8. The ambient temperature derating of 5℃/1000m is needed for operating altitude greater than 2000m(6500ft).

MEANWELLCHINHHANG.COM

Block Diagram

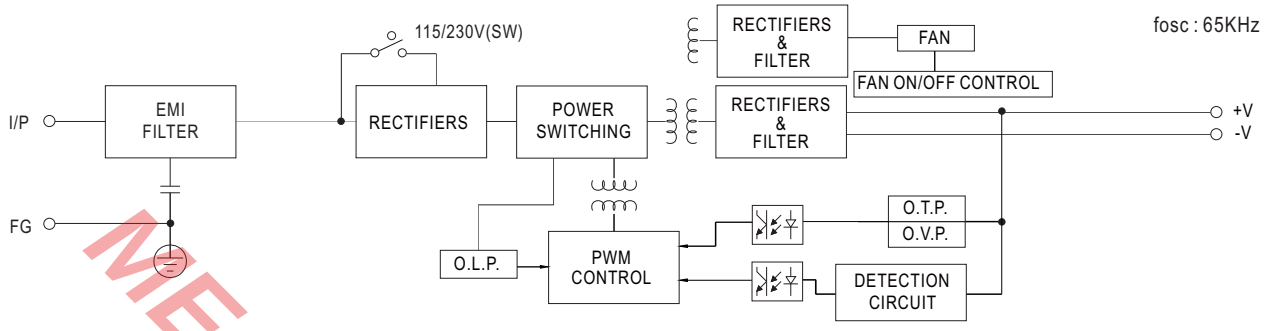

Derating Curve

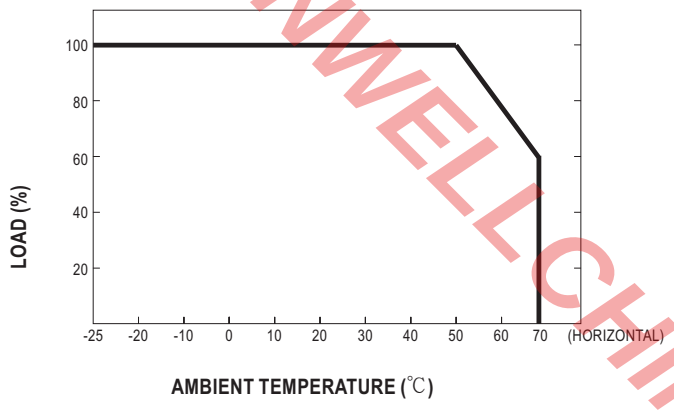

Static Characteristics

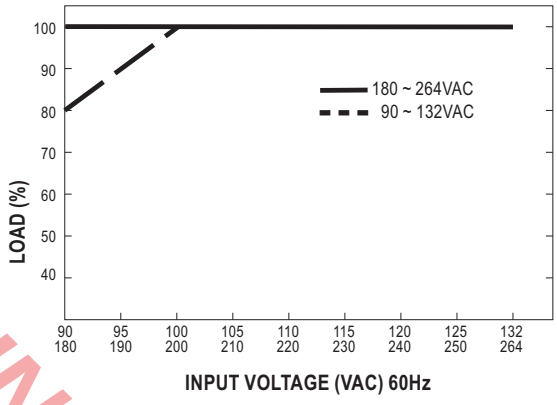

MEANWELLCHINHHANG.COM

■ Mechanical Specification

Case No.207A Unit:mm

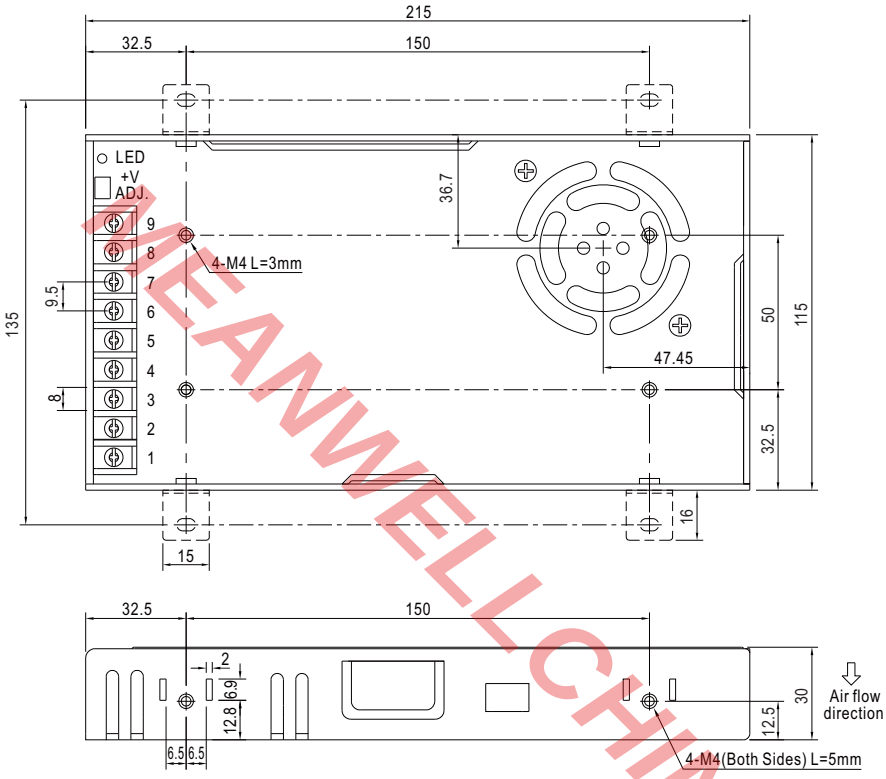

Terminal Pin No. Assignment :

Pin No.	Assignment	Pin No.	Assignment
1	AC/L	4~6	DC OUTPUT -V
2	AC/N	7~9	DC OUTPUT +V
3	FG ⏚		

■ Installation Manual

Please refer to : http://www.meanwell.com/manual.html

MEANWELLCHINHHANG.COM